neoForce™

A New Level of Embedded Intelligence

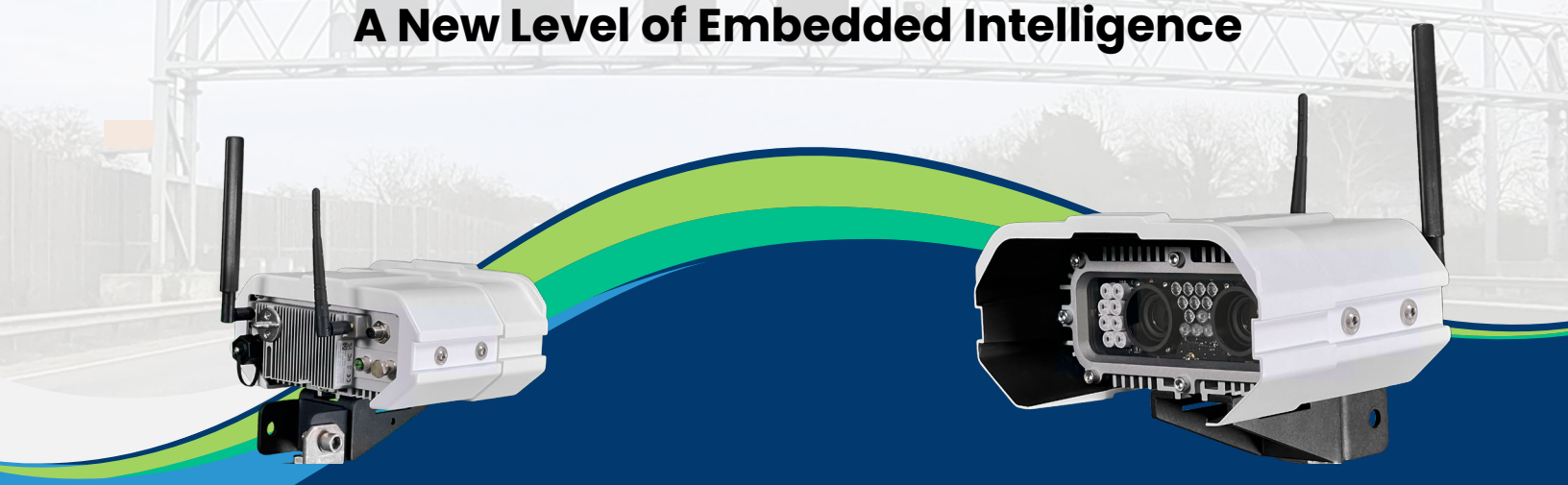

neoForce™ combines an integrated artificial intelligence (AI) engine with dual-channel OCR to support accurate vehicle detection and recognition in demanding roadside environments, analyzing infrared and color imagery simultaneously to capture what matters. The embedded AI engine leverages Neology ANPR and vehicle classification to deliver real-time performance at the edge, software supporting detection, classification and analytics across multi-lane free-flow applications.

The compact camera design integrates two 8-megapixel sensors with remotely controllable zoom lenses, a mechanical IR cut filter, and a multi-beam infrared illuminator to support consistent image quality in all lighting and weather conditions while simplifying installation.

By combining ANPR with real-time vehicle classification and embedded analytics, neoForce™ supports situational awareness and contextual insight at the roadside, helping address detection-evasive behavior in real-world deployments.

neoForce™ includes integrated GPS, Wi-Fi, 4G/5G cellular, Ethernet connectivity and flexible mounting options.

Features:

- Enforcement-grade data integrity and security for multi-lane deployments
- AI-based, real-time vehicle detection, including previously unseen vehicles
- Dual-channel hybrid AI OCR supporting high-accuracy ANPR
- Real-time vehicle classification using an integrated analytics engine
- Continuous 24/7 operation with built-in high-efficiency infrared illumination
- Simultaneous video streaming to support monitoring and situational awareness

neology®
mobility [re]imagined®

www.neology.com

© Neology, Inc 2026 | All Rights Reserved

PRODUCT DIMENSIONS:

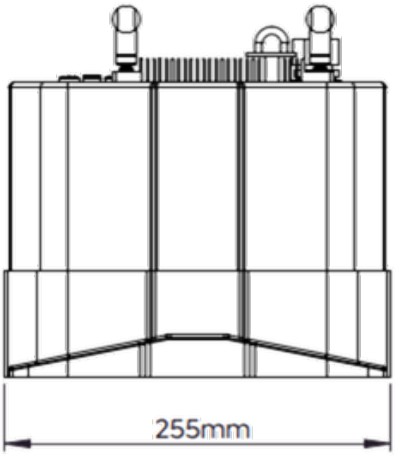

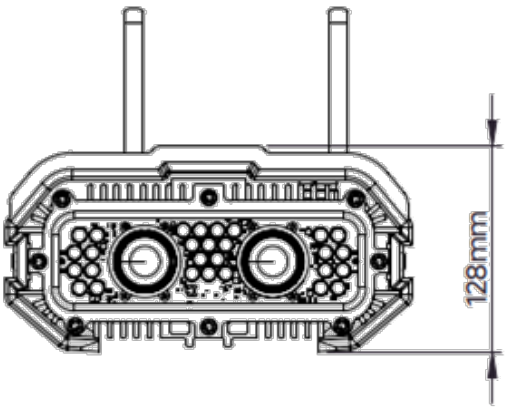

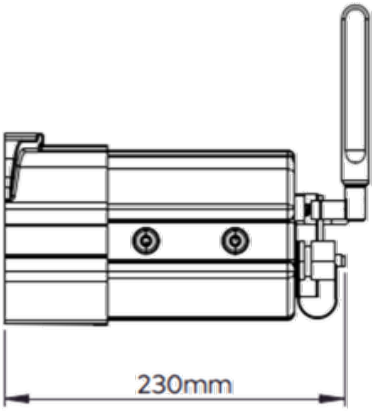

BRACKET OPTIONS:

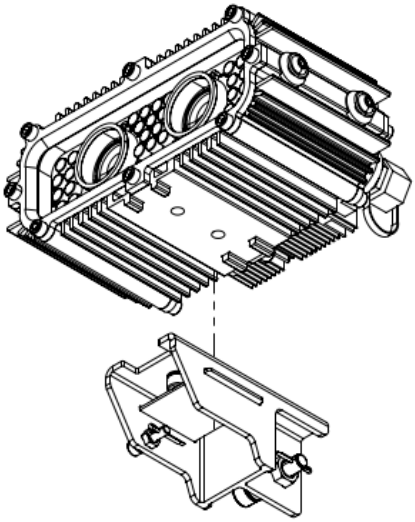

Pelco Adaptor Bracket

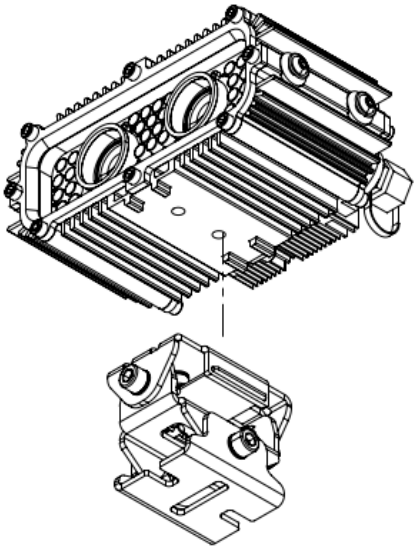

3-Axis Bracket

© Neology, Inc 2026 | All Rights Reserved

DATA SHEET:

Channels	Dual channel OCR, simultaneous IR and daylight processing
Processor	Fully integrated AI processor platform for analytics at the edge
Analytics	Dual AI Hybrid OCR, vehicle classification, spot speed estimation for statistical purposes (not enforcement)
Vehicle Detection modes	License plate and simultaneous 'no plate' vehicle detection
Trigger Modes	Freeflow (self-trigger) and external trigger inputs
Data Management	High-capacity encrypted storage for data security and reliability
Data Integrity (enforcement mode)	Tamper detection, encryption, signed data, NTP and time stamp validation
Resolution	2848x1600 (8mpix ANPR & Colour)
Lensing	Remotely configurable motorized zoom lens, 12-50mm
Day/Night mode	Switchable IR cut filter for optimal performance
IR wavelength (options)	740nm, 810nm, 850nm, 940nm
Illuminator	Built in high efficiency IR illumination, external illuminator interface
Lane Coverage	Up to 4 lanes (Europe), 2 lanes (US) – subject to user-case and performance
Traffic conditions	Stationary to high-speed (0-140mph), high-volume and freeway use
Operating distance	15m to 40 m, typical
Operating conditions	24hr continuous operation
GPS	Time and position - GPS, GLONASS, Beidou, Galileo
Ethernet	Dual link 10/100/1000Mbit, 100m max cable length
Integrations	Second ethernet port for direct connection to accessories
Wireless	WiFi and cellular (4G/5G) options
Security	Firewall; SSL; VPN. Signed application updates
Other interfaces	Serial, Trigger in/out, relay
Size (W,D,H)	255x230x128mm
Weight	<4kg
DC power	48V nominal
PoE Power	Input: IEEE 802.3bt; auxiliary IEEE802.3af output (port2)
Environment	IP68; -40degC to 60degC operational
Mounting options	2-point fixing with integrated alignment repeatability feature Pole and surface adapter brackets available
Certifications	FCC, CE, RoHS

Neology, Inc. is a global tolling technology company headquartered in Carlsbad, California, that develops and delivers tolling products and services used in over 5,000 lanes and ETC systems across North America, Latin America, Europe, and Asia Pacific.

Neology is partnering with our customers to help communities enhance mobility, increase sustainability, improve safety, and generate increased revenue.

neology
mobility [re]imagined

© Neology, Inc 2026 | All Rights Reserved